Chapter 4. Accessible Routes

401 General

401.1 Scope. Accessible routes required by the scoping provisions adopted by the administrative authority shall comply with the applicable provisions of this chapter.

402 Accessible Routes

402.1 General. Accessible routes shall comply with Section 402.

402.2 Components. Accessible routes shall consist of one or more of the following components: Walking surfaces with a slope not steeper than 1:20, doorways, ramps, curb ramps, elevators, and wheelchair (platform) lifts. All components of an accessible route shall comply with the applicable portions of this standard.

403 Walking Surfaces

403.1 General. Walking surfaces that are a part of an accessible route shall comply with Section 403.

403.2 Floor or Ground Surface. Floor or ground surfaces shall comply with Section 302.

403.3 Slope. The running slope of walking surfaces shall not be steeper than 1:20. The cross slope of a walking surface shall not be steeper than 1:48.

403.4 Changes in Level. Changes in level shall comply with Section 303.

403.5 Clear Width. Clear width of an accessible route shall comply with Table 403.5.

Table 403.5—Clear Width of an Accessible Route

Segment Length	Minimum Segment Width
≤ 24 inches (610 mm)	32 inches (815 mm)[1]
> 24 inches (610 mm)	36 inches (915 mm)

[1]Consecutive segments of 32 inches (815 mm) wide must be separated by a route segment 48 inches (1220 mm) long minimum and 36 inches (915 mm) wide minimum.

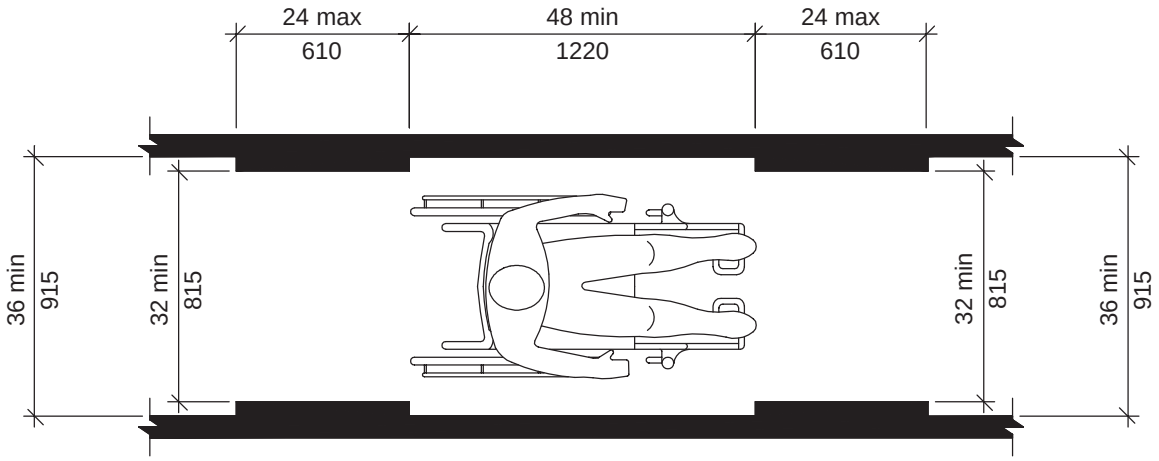

Fig. 403.5
Clear Width of an Accessible Route

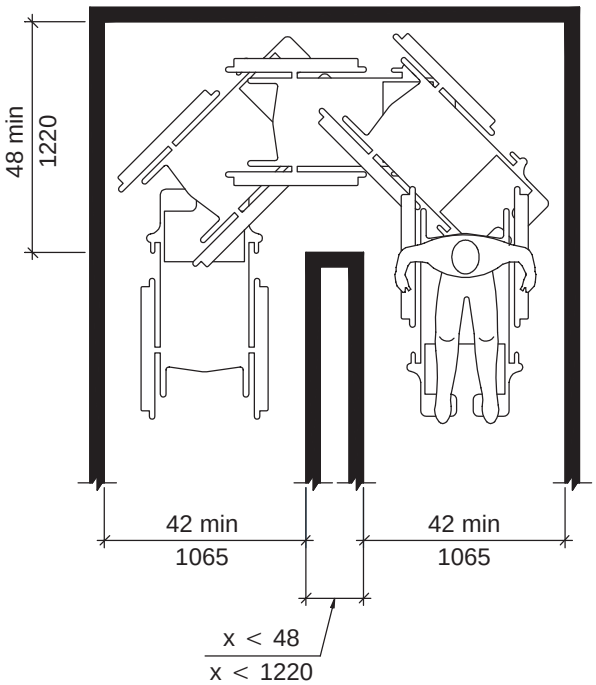

Fig. 403.5.1
Clear Width at Turn

403.5.1 Clear Width at Turn. Where an accessible route makes a 180 degree turn around an object which is less than 48 inches (1220 mm) wide, clear widths shall be 42 inches (1065 mm) minimum approaching the turn, 48 inches (1220 mm) minimum during the turn, and 42 inches (1065 mm) minimum leaving the turn.

403.5.2 Passing Space. An accessible route with a clear width less than 60 inches (1525 mm) shall provide passing spaces at intervals of 200 feet (61 m) maximum. These passing spaces shall be either a 60 inch (1525 mm) by 60 inch (1525 mm) minimum space, or an intersection of two walking surfaces which provide a T-shaped turning space complying with Section 304.

404 Doors and Doorways

404.1 General. Doors and doorways that are part of an accessible route shall comply with Section 404.

404.2 Manual Doors. Manual doors and doorways, and manual gates, including ticket gates, shall comply with the requirements of Sections 404.2.1 through 404.2.11.

404.2.1 Revolving Doors and Turnstiles. Revolving doors or turnstiles shall not be part of an accessible route.

404.2.2 Double-Leaf Doorways. At least one of the active leaves of doorways with two independently operated leaves shall comply with Sections 404.2.3 and 404.2.4.

404.2.3 Clear Width. Doorways shall have a clear opening of 32 inches (815 mm) minimum. Clear opening of doorways with swinging doors shall be measured between the face of door and stop, with the door open 90 degrees. Openings more than 24 inches (610 mm) deep shall provide a clear opening of 36 inches (915 mm) minimum. There shall be no projections into the clear opening width lower than 34 inches (865 mm) above the floor or ground. Projections into the minimum clear opening width more than 34 inches (865 mm) and up to 80 inches (2020 mm) above the floor or ground are permitted but shall not exceed 4 inches (102 mm).

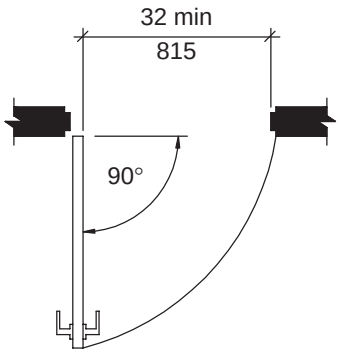

(a) Hinged Door

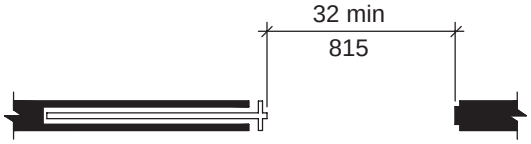

(b) Sliding Door

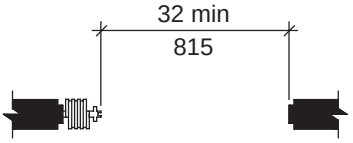

(c) Folding Door

Fig. 404.2.3
Clear Width of Doorways

404.2.4 Maneuvering Clearances at Doors. Minimum maneuvering clearances at doors shall comply with Sections 404.2.4.1 through 404.2.4.7.

EXCEPTION: Doors to hospital bedrooms shall be exempt from the requirement for space at the latch side of door provided the door is 44 inches (1120 mm) wide minimum.

404.2.4.1 Swinging Doors. Swinging doors shall have maneuvering clearances complying with Table 404.2.4.1.

Table 404.2.4.1—Maneuvering Clearances for Manual Swinging Doors

TYPE OF USE		MINIMUM CLEARANCES	
Approach Direction	**Door Side**	**Perpendicular to Door[1]**	**Beyond Latch Parallel to Door**
From front	Pull	60 inches (1525 mm)	18 inches (455 mm)
From front	Push	48 inches (1220 mm)	0 inches (0 mm)[2]
From hinge	Pull	60 inches (1525 mm) 54 inches (1370 mm)	36 inches (915 mm) 42 inches (1065 mm)
From hinge	Push	42 inches (1065 mm)[3]	54 inches (1370 mm)
From latch	Pull	48 inches (1220 mm)[4]	24 inches (610 mm)
From latch	Push	42 inches (1065 mm)[4]	24 inches (610 mm)

[1]Maneuvering space shall include full width of doorway.
[2]Add 12 inches (305 mm) if closer and latch provided.
[3]Add 6 inches (150 mm) if closer and latch provided.
[4]Add 6 inches (150 mm) if closer provided.

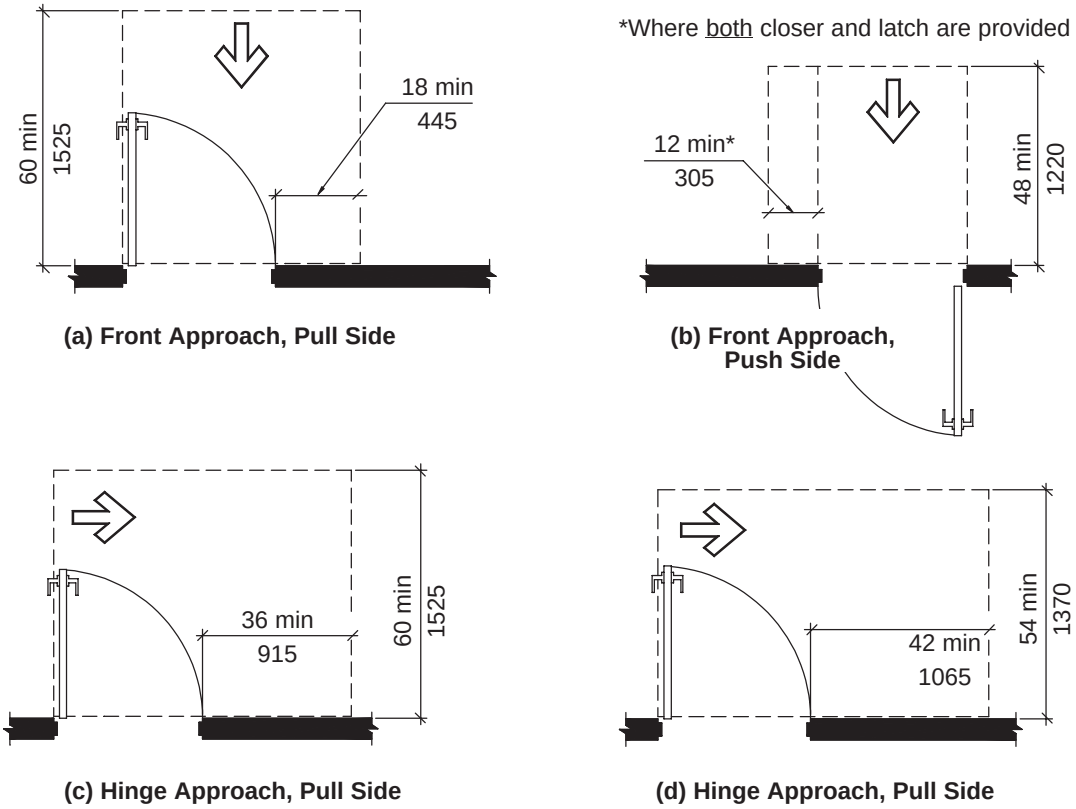

Fig. 404.2.4.1
Maneuvering Clearance at Swinging Doors

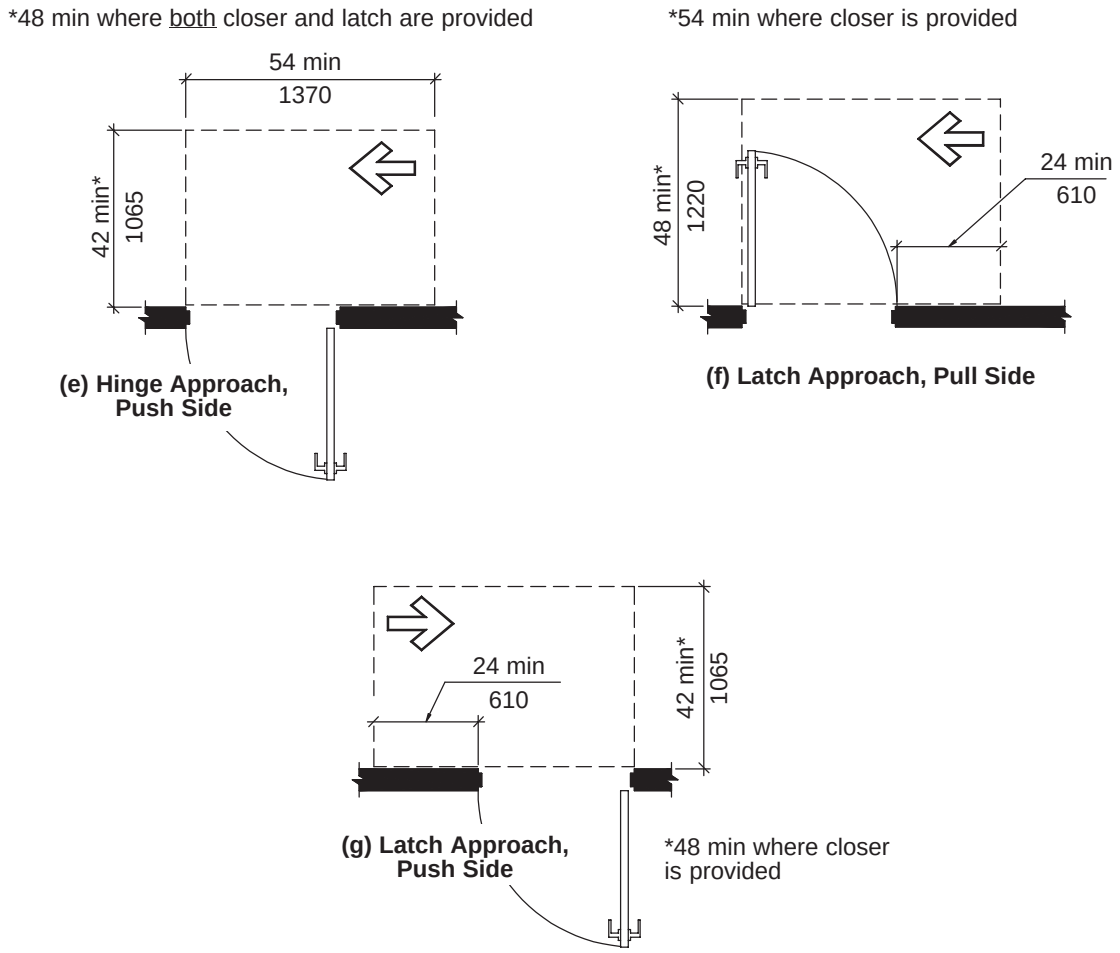

Fig. 404.2.4.1
Maneuvering Clearance at Swinging Doors (continued)

404.2.4.2 Sliding and Folding Doors. Sliding doors and folding doors shall have maneuvering clearances complying with Table 404.2.4.2.

404.2.4.3 Doorways without Doors. Doorways without doors that are less than 36 inches (915 mm) wide shall have maneuvering clearances complying with Table 404.2.4.3

Table 404.2.4.2—Maneuvering Clearances for Sliding and Folding Doors

APPROACH DIRECTION	MINIMUM CLEARANCES	
	PERPENDICULAR TO DOOR[1]	PARALLEL TO DOOR
From front	48 inches (1220 mm)	0 inches (0 mm)
From hinge side	42 inches (1065 mm)	54 inches (1370 mm)[2]
From latch side	42 inches (1065 mm)	24 inches (610 mm)[2]

[1]Maneuvering space shall include full width of doorway.
[2]From the latch side toward the approach direction.

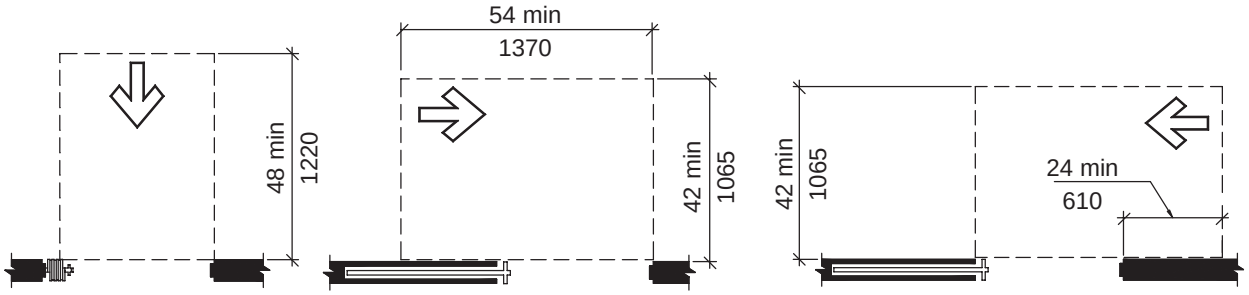

(a) Front Approach **(b) Pocket or Hinge Approach** **(c) Stop or Latch Approach**

Fig. 404.2.4.2
Maneuvering Clearance at Sliding and Folding Doors

Table 404.2.4.3—Maneuvering Clearances for Doorways without Doors

Approach Direction	MINIMUM CLEARANCES Perpendicular to Doorway[1]
From front	48 inches (1220 mm)
From side	42 inches (1065 mm)

[1]Maneuvering space shall include full width of doorway.

404.2.4.4 Recessed Doors. Where the plane of the doorway is recessed more than 8 inches (200 mm) from the plane of the wall, clearances for front approach shall be provided.

404.2.4.5 Floor or Ground Surface. Floor or ground surface within the maneuvering clearances shall have a slope not steeper than 1:48 and shall comply with Section 302.

404.2.5 Thresholds at Doorways. Thresholds, if provided, at doorways shall be $^1/_2$ inch (13 mm) high maximum. Raised thresholds and changes in level at doorways shall comply with Sections 302 and 303.

404.2.6 Two Doors in Series. Distance between two hinged or pivoted doors in series shall be 48 inches (1220 mm) minimum plus the width of any door swinging into the space. Doors in series shall swing either in same direction or away from space between doors.

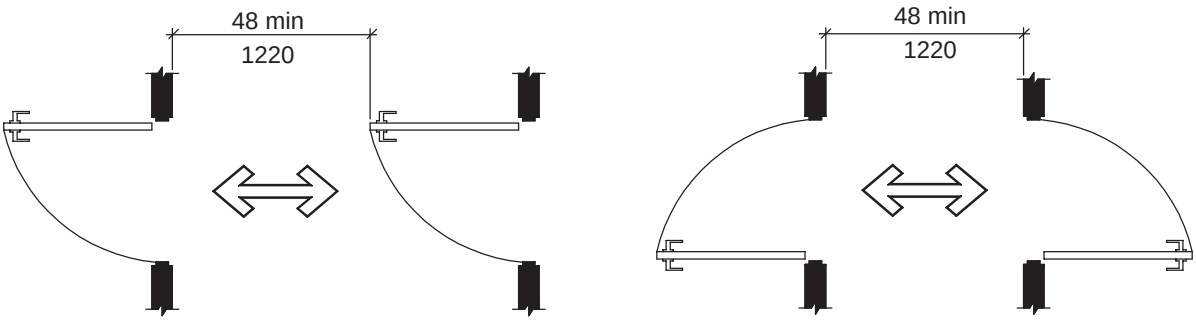

(a) **(b)**

Fig. 404.2.6
Two Doors in Series

404.2.7 Door Hardware. Handles, pulls, latches, locks, and other operable parts on accessible doors shall have a shape that is easy to grasp with one hand and does not require tight grasping, pinching, or twisting of the wrist to operate. Such hardware shall be 34 inches (865 mm) minimum and 48 inches (1220 mm) maximum above the floor or ground. Where sliding doors are in the fully open position, operating hardware shall be exposed and usable from both sides.

EXCEPTION: Locks used only for security purposes and not used for normal operation are permitted in any location.

404.2.8 Closing Speed.

404.2.8.1 Door Closers. Door closers shall be adjusted so that from an open position of 90 degrees, the time required to move the door to an open position of 12 degrees shall be 5 seconds minimum.

404.2.8.2 Spring Hinges. Door spring hinges shall be adjusted so that from the open position of 70 degrees, the door shall move to the closed position in 1.5 seconds minimum, measured under ambient conditions.

404.2.9 Door-Opening Force. Fire doors shall have the minimum opening force allowable by the appropriate administrative authority. The maximum force for pushing open or pulling open doors other than fire doors shall be as follows:

1. Interior hinged door: 5.0 pounds (22.2 N)
2. Sliding or folding door: 5.0 pounds (22.2 N)

These forces do not apply to the force required to retract latch bolts or disengage other devices that hold the door in a closed position.

404.2.10 Door Surface. Door surfaces within 10 inches (255 mm) of the floor or ground measured vertically shall be a smooth surface on the push side extending the full width of the door. Parts creating horizontal or vertical joints in such surface shall be within $^{1}/_{16}$ inch (1.6 mm) of the same plane as the other. Cavities created by added kick plates shall be capped.

EXCEPTIONS:

1. Sliding doors.
2. Tempered glass doors without stiles and having a bottom rail or shoe with the top leading edge tapered at no less than 60 degrees from the horizontal shall not be required to meet the 10 inch (255 mm) bottom rail height requirement.
3. Doors which do not extend to within 10 inches (255 mm) of the floor or ground.

404.2.11 Vision Lites. Doors and sidelites adjacent to doors containing one or more glazing panels that permit viewing through the panels shall have the bottom of at least one panel 43 inches (1090 mm) maximum above the floor or ground.

404.3 Automatic Doors. Automatic doors and automatic gates shall comply with Sections 404.3.1 through 404.3.6. Full powered automatic doors shall comply with ANSI/BHMA A156.10. Low-energy and power-assisted doors shall comply with ANSI/BHMA A156.19.

404.3.1 Clear Opening Width. Doorways shall have a clear opening of 32 inches (815 mm) in power-on and power-off mode. The minimum clear width for automatic door systems shall be based on the clear opening provided by all leafs in the open position.

404.3.2 Maneuvering Clearances. Clearances at power-assisted doors shall comply with Section 404.2.4.

404.3.3 Thresholds. Thresholds and changes in level at doorways shall comply with Section 404.2.5.

404.3.4 Two Doors in Series. Doors in series shall comply with Section 404.2.6.

404.3.5 Control Switches. Control switches shall comply with Section 309.

404.3.6 Signs. Labels and warnings for automatic doors shall comply with Section 703.4.

405 Ramps

405.1 General. Walking surfaces on accessible routes with a running slope steeper than 1:20 are ramps and shall comply with Section 405.

405.2 Slope. Ramp runs shall have a running slope not steeper than 1:12.

EXCEPTION: Ramps in or on existing buildings or facilities shall be permitted to have slopes steeper than 1:12 complying with Table 405.2 where such slopes are necessitated by space limitations.

Table 405.2—Allowable Ramp Dimensions for Construction in Existing Sites, Buildings, and Facilities

Slope[1]	Maximum Rise
Steeper than 1:10 but not steeper than 1:8	3 inches (75 mm)
Steeper than 1:12 but not steeper than 1:10	6 inches (150 mm)

[1]A slope steeper than 1:8 shall not be permitted.

405.3 Cross Slope. Cross slope of ramp runs shall not be steeper than 1:48.

405.4 Floor or Ground Surfaces. Floor or ground surfaces of ramp runs shall comply with Section 302.

405.5 Clear Width. The clear width of a ramp run shall be 36 inches (915 mm) minimum.

405.6 Rise. The rise for any ramp run shall be 30 inches (760 mm) maximum.

405.7 Landings. Ramps shall have landings at bottom and top of each run. Landings shall comply with Sections 405.7.1 through 405.7.5.

405.7.1 Slope. Landings shall have a slope not steeper than 1:48 and shall comply with Section 302.

405.7.2 Width. Clear width of landings shall be at least as wide as the widest ramp run leading to the landing.

405.7.3 Length. Landing length shall be 60 inches (1525 mm) minimum clear.

405.7.4 Change in Direction. Ramps that change direction at landings shall have a 60 inch (1525 mm) minimum by 60 inch (1525 mm) minimum landing.

405.7.5 Doorways. Where doorways are adjacent to a ramp landing, maneuvering clearances required by Sections 404.2.4 and 404.3.2 shall be permitted to overlap the landing area.

405.8 Handrails. Ramps with a rise greater than 6 inches (150 mm) shall have handrails complying with Section 505. Handrails shall not reduce the required clearances of a ramp run or landing.

405.9 Edge Protection. Edge protection complying with Section 405.9.1 or 405.9.2 shall be provided on each side of ramp runs and at each side of ramp landings.

EXCEPTIONS:

1. Ramps not required to have handrails where sides complying with Section 406.4 are provided.
2. Sides of ramp landings serving an adjoining ramp run or stairway.
3. Sides of ramp landings having a vertical drop-off of $^1/_2$ inch (13 mm) maximum within 10 inches (255 mm) horizontally of the minimum landing area.

405.9.1 Extended Floor or Ground Surface. The floor or ground surface of the ramp run or landing shall extend 12 inches (305 mm) minimum beyond the inside face of a railing complying with Section 505.

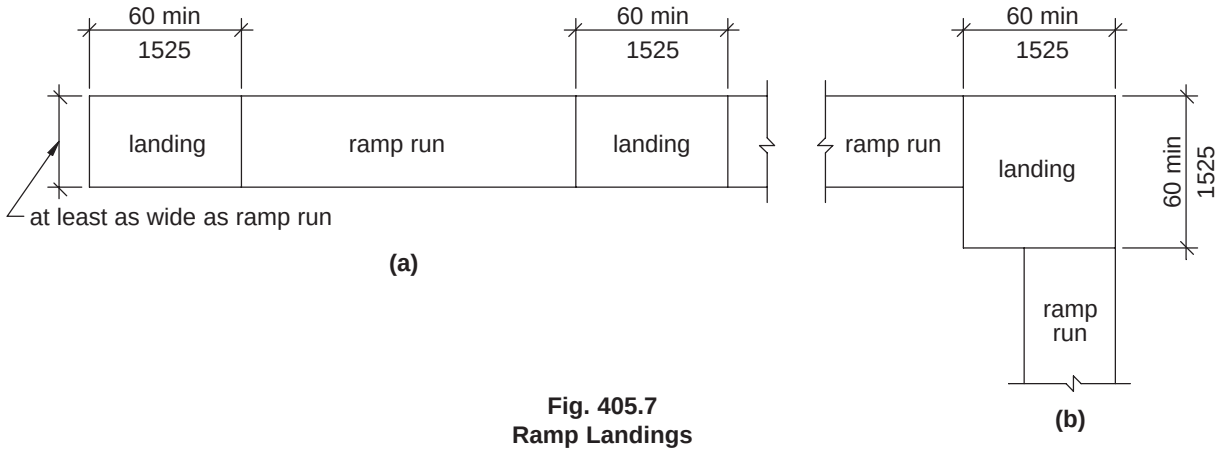

Fig. 405.7
Ramp Landings

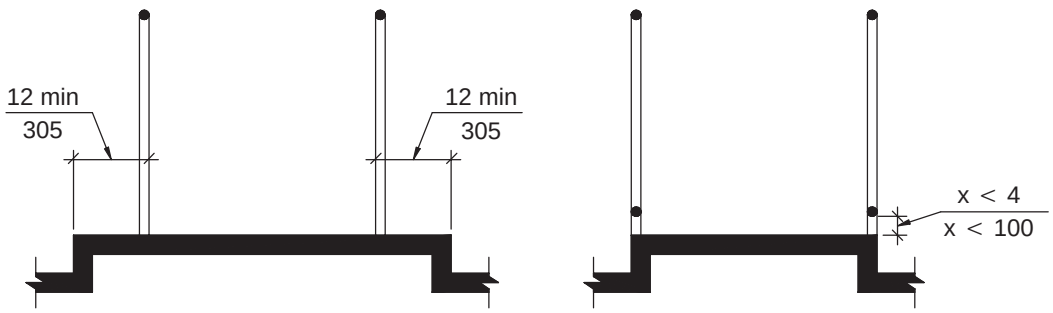

(a) Extended Surface **(b) Curb or Barrier**

Fig. 405.9
Ramp Edge Protection

405.9.2 Curb or Barrier. A curb or barrier shall be provided that prevents the passage of a 4-inch (100 mm) diameter sphere below a height of 4 inches (100 mm).

405.10 Outdoor Conditions. Outdoor ramps and approaches to ramps shall be designed so that water will not accumulate on walking surfaces.

406 Curb Ramps

406.1 General. Curb ramps on accessible routes shall comply with Section 406.

406.2 Slope. Slopes of curb ramps shall comply with Section 405.2.

406.3 Counter Slope. Counter slopes of adjoining gutters and road surfaces immediately adjacent to the curb ramp or accessible route shall not be steeper than 1:20. Transitions from ramps to walks, gutters or streets shall be at the same level.

406.4 Sides of Curb Ramps. Where pedestrians must walk across a curb ramp, the ramp shall have flared sides. Slope of flares shall not be steeper than 1:10. Where the width of the walking surface at the top of the ramp and parallel to the run of the ramp is less than 48 inches (1220 mm) wide, the flared sides shall have a slope not steeper than 1:12. Curb ramps with returned curbs shall be permitted where pedestrians would not normally walk across the ramp.

406.5 Width. Curb ramps shall be 36 inches (915 mm) wide minimum, exclusive of flared sides.

406.6 Floor or Ground Surface. Floor or ground surfaces of curb ramps shall comply with Section 302.

406.7 Location. Curb ramps and their side flares shall not protrude into vehicular traffic lanes, parking spaces, or into parking space access aisles.

406.8 Obstructions. Curb ramps shall be located or protected to prevent their obstruction by parked vehicles.

406.9 Handrails. Handrails are not required on curb ramps.

406.10 Location at Marked Crossings. Curb ramps at marked crossings shall be wholly contained within the markings, excluding any flared sides.

406.11 Diagonal Curb Ramps. Diagonal or corner-type curb ramps with returned curbs or other

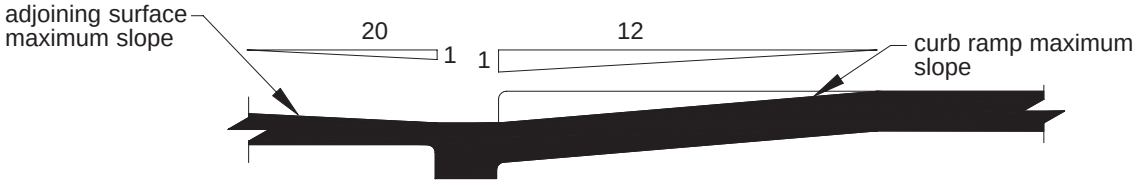

Fig. 406.3
Counter Slope of Surfaces Adjacent to Curb Ramps

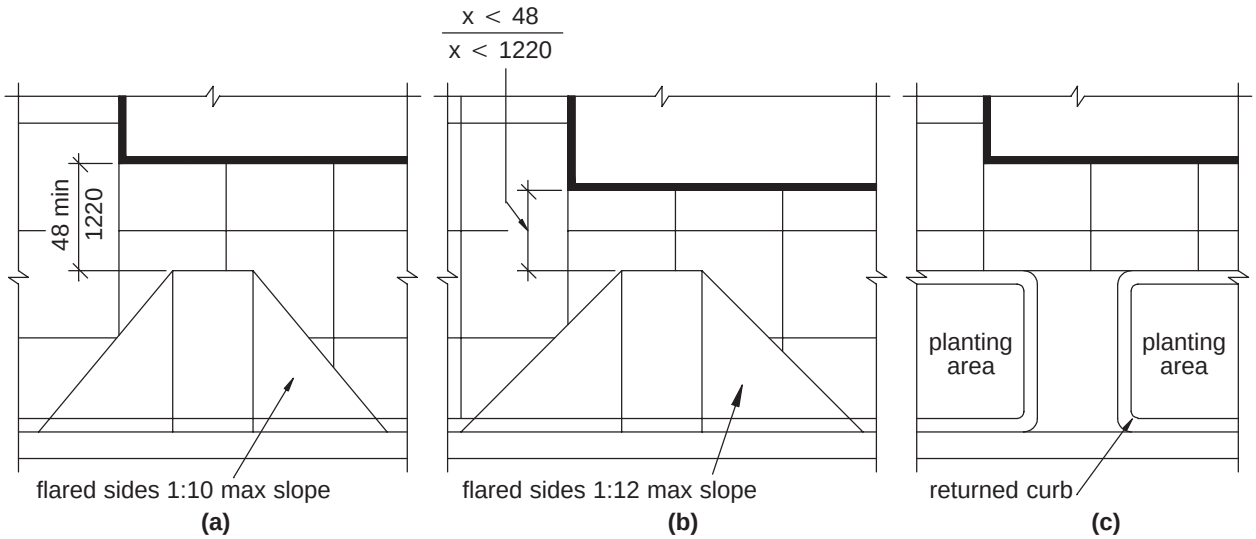

Fig. 406.4
Sides of Curb Ramps

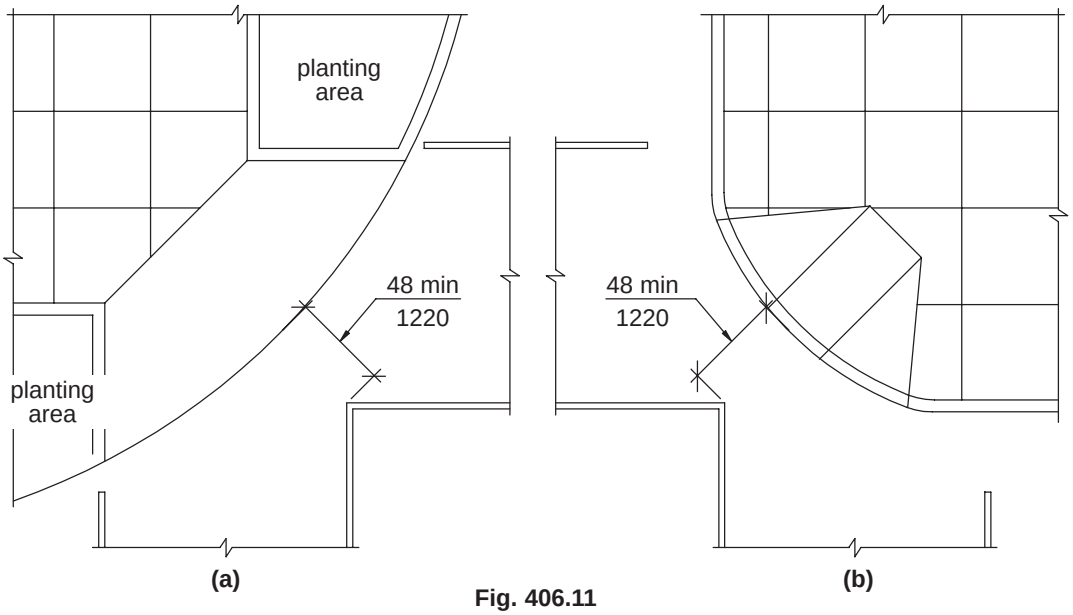

Fig. 406.11
Diagonal Curb Ramps

well-defined edges shall have the edges parallel to the direction of pedestrian flow. Bottoms of diagonal curb ramps shall have 48 inches (1220 mm) minimum clear space, measured parallel to the running slope. Diagonal curb ramps provided at marked crossings shall provide the minimum clear space within the markings. Diagonal curb ramps with flared sides shall have a segment of straight curb 24 inches (610 mm) long minimum on each side of the curb ramp and within the marked crossing.

406.12 Islands. Raised islands in crossings shall be cut through level with the street or have curb ramps at both sides, and a level area 48 inches (1220 mm) long minimum by 36 inches (915 mm) wide minimum, in the part of the island intersected by the crossing.

407 Elevators

407.1 General. Elevators required to be accessible shall comply with Section 407.2. Destination-oriented elevators required to be accessible shall comply with Section 407.3. Limited use/limited application elevators required to be accessible shall

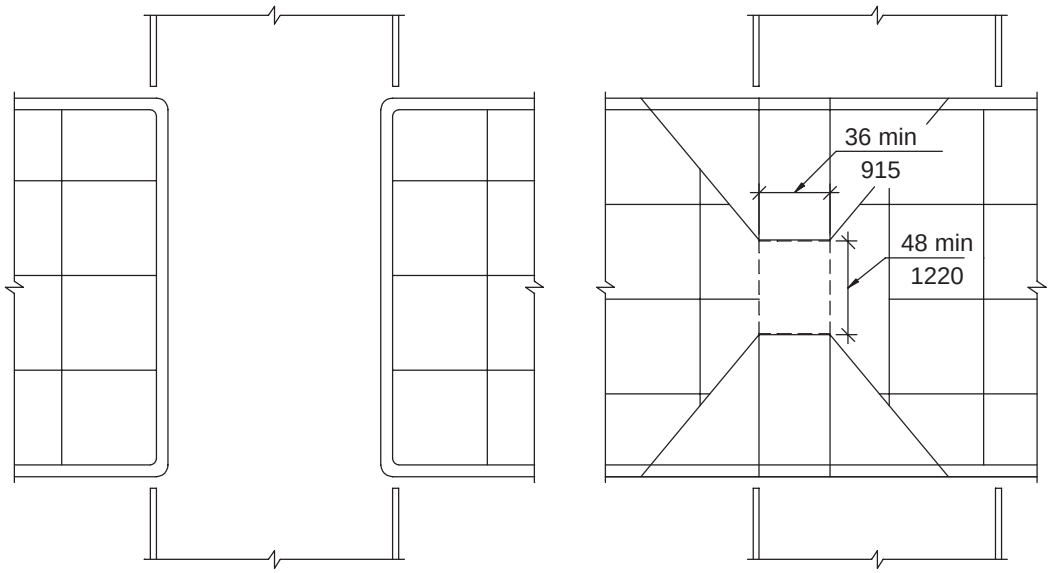

(a)
Cut through at Island

(b)
Curb Ramp at Island

Fig. 406.12
Islands

comply with Section 407.4. Altered elements of existing elevators shall comply with Section 407.5.

407.2 Elevators. Elevators shall comply with Sections 407.2.1 through 407.2.13 and ASME/ANSI A17.1. They shall be passenger elevators.

407.2.1 Automatic Operation. Elevator operation shall be automatic. Each car shall be equipped with a self-leveling feature that will automatically bring and maintain the car at floor landings within a tolerance of $^{1}/_{2}$ inch (13 mm) under rated loading to zero loading conditions.

407.2.2 Call Buttons. Call buttons in elevator lobbies and halls shall be 35 inches (890 mm) minimum and 48 inches (1220 mm) maximum above the floor or ground, measured to the centerline of the buttons. A clear floor or ground space complying with Section 305 shall be provided. Such call buttons shall have visual signals to indicate when each call is registered and when each call is answered. Call buttons shall be $^{3}/_{4}$ inch (19 mm) minimum in their smallest dimension. The button that designates the up direction shall be above the button that

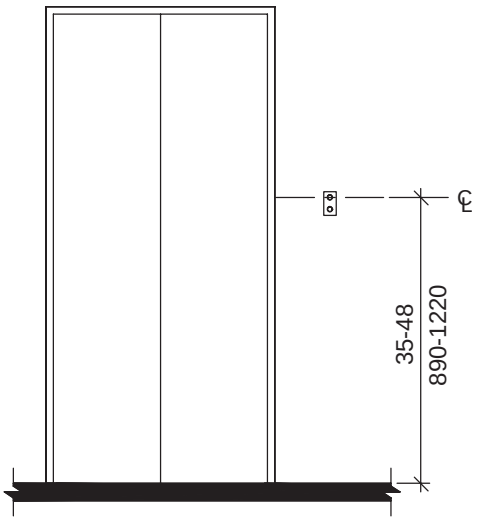

Fig. 407.2.2
Elevator Call Buttons

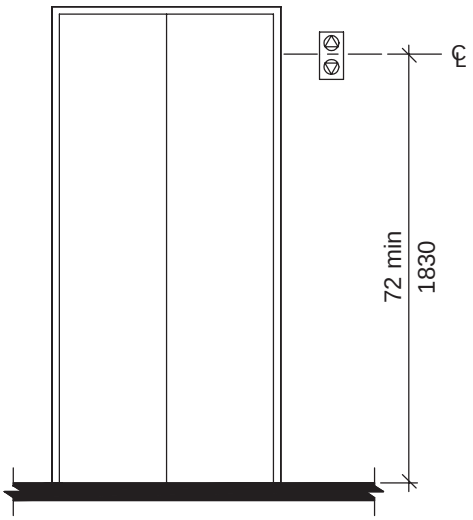

Fig. 407.2.3.2.1
Height of Elevator Visible Signals

designates the down direction. Buttons shall be raised or flush. Objects beneath hall call buttons shall protrude 1 inch (25 mm) maximum.

407.2.3 Hall Signals. A visible and audible signal shall be provided at each hoistway entrance to indicate which car is answering a call and the direction of travel, except that signals in cars, visible from the floor area adjacent to the hall call buttons, and complying with the requirements of this subsection, shall be permitted.

407.2.3.1 Audible Signals. Audible signals shall sound once for the up direction and twice for the down direction, or shall have verbal annunciators that state the word “up” or “down.” Audible signals shall have a frequency of 1500 Hz maximum. The audible signal or verbal annunciator shall be 10 dBA minimum above ambient, but shall not exceed 80 dBA maximum, measured at the hall call button.

407.2.3.2 Visible Signals. Visible signals shall comply with Sections 407.2.3.2.1 through 407.2.3.2.3.

407.2.3.2.1 Height. Hall signal fixtures shall be 72 inches (1830 mm) minimum above the floor or ground, measured to the centerline of the fixture.

407.2.3.2.2 Size. The visible signal elements shall be $2^1/_2$ inches (63 mm) minimum in their smallest dimension.

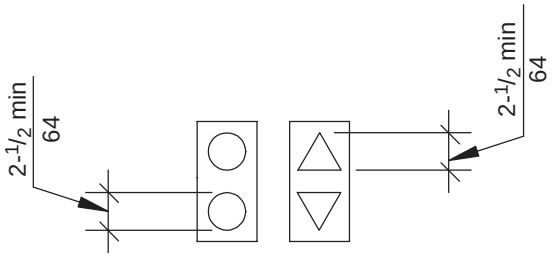

Fig. 407.2.3.2.2
Size of Elevator Visible Signals

407.2.3.2.3 Visibility. Signals shall be visible from the floor area adjacent to the hall call button.

407.2.4 Tactile Characters on Hoistway Entrances. Tactile character and Braille floor designations shall be provided on both jambs of elevator hoistway entrances and shall be 60 inches (1525 mm) above the floor or ground, measured from the baseline of the characters. A tactile star shall also be provided on both jambs at the main entry level. Such characters shall be 2 inches (51 mm) high and shall comply with Section 703.2.

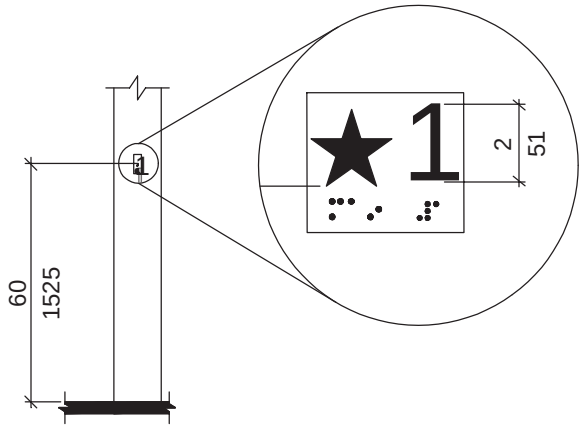

Fig. 407.2.4
Tactile Characters on Elevator Hoistway Entrances

407.2.5 Doors. Elevator doors shall be the horizontal type. Elevator hoistway and car doors shall open and close automatically. Elevator doors shall be provided with a reopening device that shall stop and reopen a car door and hoistway door automatically if the door becomes obstructed by an object or person. The device shall be activated by sensing an obstruction passing through the door opening at 5 inches (125 mm) and at 29 inches (735 mm) above the floor or ground. The device shall not require physical contact to be activated, although contact may occur before the door reverses. Door reopening devices shall remain effective for 20 seconds minimum.

407.2.6 Door and Signal Timing for Hall Calls. The minimum acceptable time from notification that a car is answering a call until the door starts to close shall be calculated by the following equation, but shall not be less than 5 seconds:

T = D/1.5 ft/s (D/455 mm/s)

where T = total time in seconds and D = distance in feet (millimeters) from the point in the lobby or corridor 60 inches (1525 mm) directly in front of the farthest call button controlling that car to the centerline of its hoistway door. For cars with in-car signals, T begins when the signal is visible from the point 60 inches (1525 mm) directly in front of the farthest hall call button and the audible signal is sounded.

407.2.7 Door Delay for Car Calls. Elevator doors shall remain fully open in response to a car call for 3 seconds minimum.

407.2.8 Inside Dimensions of Elevator Cars. The clear width of elevator doors and the inside dimensions of elevator cars shall comply with Table 407.2.8.

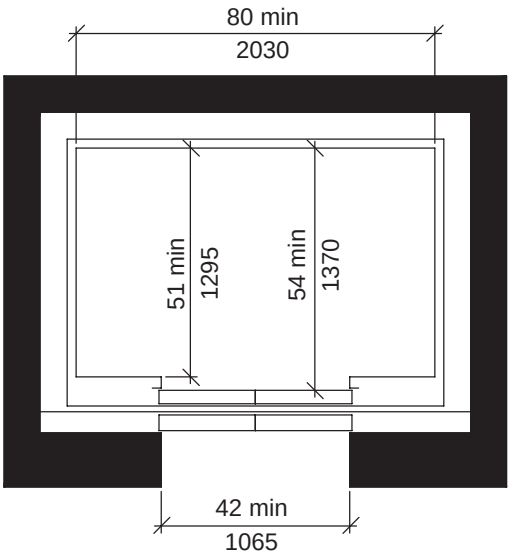

(a) Centered Door Location

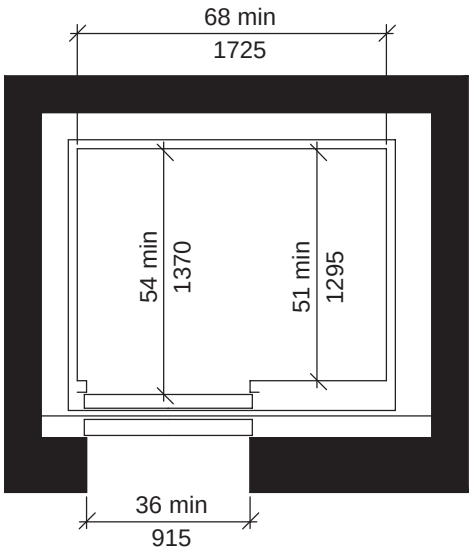

(b) Off-Centered Door Location

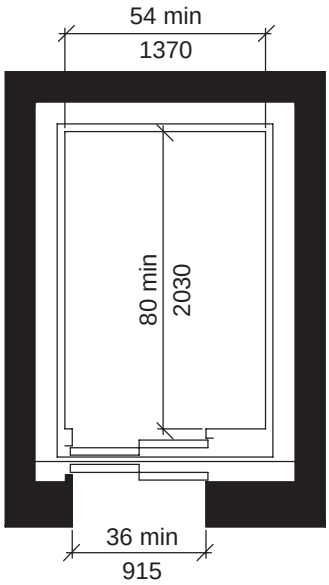

(c) Any Door Location

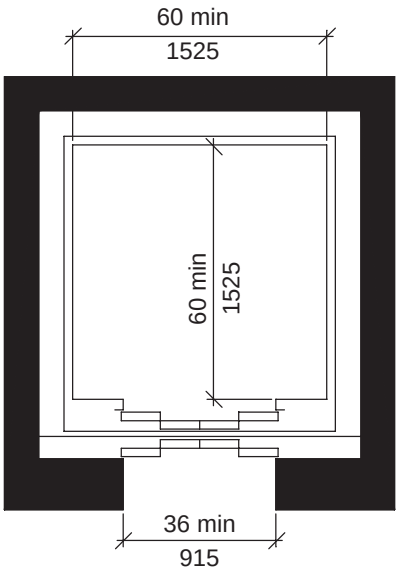

(d) Any Door Location

Fig. 407.2.8
Inside Dimensions of Elevator Cars

Table 407.2.8—Minimum Dimensions of Elevator Cars[1]

Door Location	Door Clear Width	Inside Car, Side to Side	Inside Car, Back Wall to Front Return	Inside Car, Back Wall to Inside Face of Door
Centered	42 inches (1065 mm)	80 inches (2030 mm)	51 inches (1295 mm)	54 inches (1370 mm)
Side (Off Center)	36 inches (915 mm)[2]	68 inches (1725 mm)	51 inches (1295 mm)	54 inches (1370 mm)
Any	36 inches (915 mm)[2]	54 inches (1370 mm)	80 inches (2030 mm)	80 inches (2030 mm)
Any	36 inches (915 mm)[2]	60 inches (1525 mm)	60 inches (1525 mm)	60 inches (1525 mm)

[1]Other car configurations that provide a 36 inch (915 mm) clear door width and a turning space complying with Section 304 with the door closed are permitted.
[2]A tolerance of minus $^5/_8$ inch (16 mm) is permitted.

407.2.9 Floor Surfaces. Floor surfaces in elevator cars shall comply with Section 302. The horizontal clearance between the edge of the car platform sill and the edge of the landing sill shall be $1^1/_4$ inches (32 mm) maximum.

407.2.10 Illumination Levels. The level of illumination at the car controls, platform, and car threshold and landing sill shall be 5 footcandles (54 lux) minimum.

407.2.11 Car Controls. Elevator controls shall comply with Sections 407.2.11.1 through 407.2.11.4.

407.2.11.1 Buttons. Buttons shall be $^3/_4$ inch (19 mm) minimum in their smallest dimension. Buttons shall be raised or flush. Except where provided in a standard telephone keypad arrangement, buttons shall be arranged with numbers in ascending order. Where two or more columns of buttons are provided they shall read from left to right.

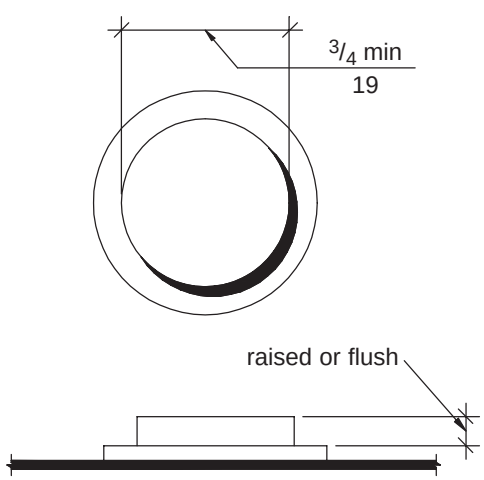

Fig. 407.2.11.1
Elevator Car Control Buttons

407.2.11.2 Button Designations. Except where provided in a standard telephone keypad arrangement, control buttons shall be identified by tactile characters complying with Section 703.2. Tactile characters and Braille shall be placed immediately to the left of the button to which they apply. The control button for the main entry floor, and control buttons other than remaining buttons with floor designations, shall be identified with tactile symbols complying with Table 407.2.11.2. Buttons with floor designations shall be provided with visible indicators to show that a call has been registered. The visible indication shall extinguish when the car arrives at the designated floor.

Telephone-style keypads shall be in a standard telephone keypad arrangement, and shall be identified by characters complying with Section 703.4. The number five key shall have a single raised dot. The dot shall be 0.118 inch (3 mm) to 0.120 inch (3.05 mm) base diameter and in other aspects comply with Table 703.5. Characters shall be centered on the corresponding keypad button. A display shall be provided in the car with visible indicators to show registered car destinations. The visible indication shall extinguish when the car arrives at the designated floor. A standard five-pointed star shall be used to indicate the main entry floor.

Table 407.2.11.2—Control Button Identification

Control Button	Tactile Symbol	Braille Message	Proportions Open circles indicate unused dots within each Braille Cell
3.0 mm TYP. BETWEEN ELEMENTS; 16.0 mm; 4.8 mm DOOR OPEN		OP“EN”	2.0 mm; 2.0 mm
REAR/SIDE DOOR OPEN		REAR/SIDE OP“EN”	
DOOR CLOSE		CLOSE	
REAR/SIDE DOOR CLOSE		REAR/SIDE CLOSE	
MAIN		MA“IN”	
ALARM		AL“AR”M	
PHONE		PH“ONE”	
EMERGENCY STOP (WHEN PROVIDED) X on face of octagon is not required to be tactile		“ST”OP	

407.2.11.3 Height. Buttons with floor designations shall be 48 inches (1220 mm) maximum above the floor or ground. Emergency controls, including the emergency alarm, shall be grouped at the bottom of the panel. Emergency control buttons shall have their centerlines 35 inches (890 mm) minimum above the floor or ground.

EXCEPTION: Where the elevator serves more than 16 openings and parallel approach is provided, buttons with floor designations shall be 54 inches (1370 mm) maximum above the floor or ground.

407.2.11.4 Clear Floor or Ground Space. A clear floor or ground space complying with Section 305 shall be provided at controls.

407.2.12 Car Position Indicators. In elevator cars, both audible and visible indicators shall be provided to identify the floor location of the car.

407.2.12.1 Visible Indicators. Indicator shall be above the car control panel or above the door. Numerals shall be $^1/_2$ inch (13 mm) high minimum. As the car passes or stops at a floor served by the elevator, the corresponding character shall illuminate.

407.2.12.2 Audible Indicators. The audible signal shall be 10 dBA minimum above ambient, but shall not exceed 80 dBA maximum, measured at the annunciator. The signal shall be an automatic verbal announcement which announces the floor at which the car has stopped.

EXCEPTION: For elevators that have a rated speed of 200 fpm (1 m/s) or less, an audible signal with a frequency of 1500 Hz maximum which sounds as the car passes or stops at a floor served by the elevator shall be permitted.

407.2.13 Emergency Communications. Emergency two-way communication systems between the elevator car and a point outside the hoistway shall comply with ASME/ANSI A17.1. The highest operable part of a two-way communication system shall comply with Section 308.3. If the device is in a closed compartment, the compartment door hardware shall comply with Section 309. Tactile symbols and characters complying with Section 703.2 shall be provided adjacent to the device. If the system uses a handset, the cord from the panel to the handset shall be 29 inches (735 mm) long minimum. The car emergency signaling device shall not be limited to voice communication. If instructions for use are provided, essential information shall be presented in both tactile and visual form complying with Section 703.

407.3 New Destination-Oriented Elevators. Destination-oriented elevators shall also comply with Sections 407.3.1 through 407.3.6 and 407.2.13. Such elevators shall also comply with Sections 407.3.1 through 407.3.5 and ASME/ANSI A17.1. They shall be passenger elevators.

407.3.1 Call Buttons. Call buttons shall be 35 inches (890 mm) minimum and 48 inches (1220 mm) maximum above the floor or ground, measured to the centerline of the buttons. A clear floor or ground space complying with Section 305 shall be provided. Call buttons shall be $^3/_4$ inch (19 mm) minimum in their smallest dimension. Buttons shall be raised or flush. Objects beneath hall call buttons shall protrude 1 inch (25 mm) maximum into the clear floor or ground space. Destination-oriented elevator systems shall have a keypad or other means for the entry of destination information. Keypads, if provided, shall be in a standard telephone keypad arrangement, and shall be identified by characters complying with Section 703.4. The number five key shall have a single raised dot. The dot shall be 0.118 inch (3 mm) to 0.120 inch (3.05 mm) base diameter, and in other aspects comply with Table 703.5. Destination-oriented elevator systems shall be provided with visual and audible signals which indicate which elevator car to enter. Characters shall be centered on the corresponding keypad button. A display shall be provided in the car with visible indicators to show registered car destinations. The visible indication shall extinguish when the car arrives at the designated floor. A standard five-pointed star shall be used to indicate the main entry floor.

407.3.2 Hall Signals. A visible and audible signal shall be provided to indicate a car destination corresponding with Section 407.3.1. The audible tone and verbal announcement shall be the same as those given at the call button or call button keypad, if provided. Each elevator in a bank shall have audible and visual means for differentiation.

407.3.2.1 Visible Signals. Visible signals shall comply with Sections 407.3.2.1.1 through 407.3.2.1.3.

407.3.2.1.1 Height. Hall signal fixtures shall be 72 inches (1830 mm) minimum above the floor or ground, measured to the centerline of the fixture.

407.3.2.1.2 Size. The visible signal elements shall be $2^1/_2$ inches (64 mm) minimum in their smallest dimension.

407.3.2.1.3 Visibility. Signals shall be visible from the floor area adjacent to the hoistway entrance.

407.3.3 Car Controls. Emergency controls, including the emergency alarm, shall have their centerlines 35 inches (890 mm) minimum and 48 inches (1220 mm) maximum above the floor or ground. Buttons shall be $^3/_4$ inch (19 mm) minimum in their smallest dimension. Buttons shall be raised or flush. Controls shall accommodate a forward reach or side reach complying with Section 308.

407.3.4 Car Position Indicators. In elevator cars, audible and visible car location indicators shall be provided.

407.3.4.1 Visible Indicators. Indicators shall be above the car control panel or above the door. Numerals shall be $^1/_2$ inch (13 mm) high minimum. The visible indicators shall extinguish when the car arrives at the designated floor.

407.3.4.2 Audible Indicators. An automatic verbal announcement which announces the floor at which the car has stopped shall be provided. The announcement shall be 10 dBA minimum above ambient and 80 dBA maximum, measured at the annunciator.

407.3.5 Elevator Car Identification. In addition to the tactile signs required by Section 407.2.4, a tactile elevator car identification shall be placed immediately below the hoistway entrance floor designation. The characters shall be 2 inches (51 mm) high and shall comply with Section 703.2.

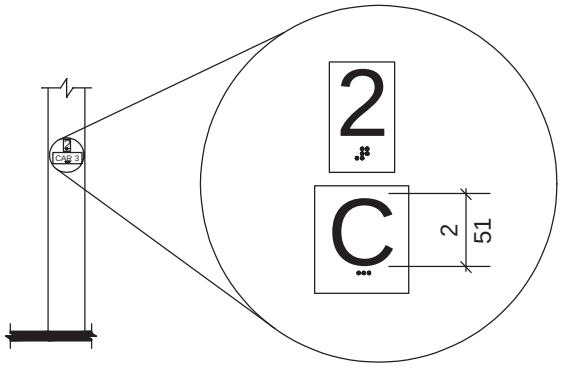

Fig. 407.3.5
Destination-Oriented Elevator Car Identification

407.3.6 Door and Signal Timing for Hall Calls. The minimum acceptable time from notification of the car assigned at the keypad until the door starts to close shall be calculated by the following equation, but shall not be less than 5 seconds:

T = D/1.5 ft/s (D/455 mm/s)

where T = total time in seconds and D = distance in feet (millimeters) from the keypad to the centerline of the assigned hoistway door.

407.4 Limited-Use/Limited-Application Elevators. Limited-use/limited-application elevators shall comply with Sections 407.4.1 through 407.4.10 and ASME/ANSI A17.1, Part XXV.

407.4.1 Automatic Operation. Elevator operation shall be automatic. Each car shall automatically stop at a floor landing within a tolerance of $^1/_2$ inch (13 mm) under rated loading to zero loading conditions.

407.4.2 Call Buttons. Call buttons in elevator lobbies and halls shall be 35 inches (890 mm) minimum and 48 inches (1220 mm) maximum above the floor or ground, measured to the centerline of the buttons. Such call buttons shall have visual signals to indicate when each call is registered and when each call is answered. Call buttons shall be $^3/_4$ inch (19 mm) minimum in their smallest dimension, and shall be raised or flush. The button that designates the up direction shall be above the button that designates the down direction. Objects beneath hall call buttons shall protrude 1 inch (25 mm) maximum.

407.4.3 Hall Signals. A visible and audible signal complying with Section 407.2.3 shall be provided in the car or at the hoistway entrance to indicate the direction of travel.

407.4.4 Tactile Characters on Hoistway Entrances. Tactile character and Braille floor designations shall be provided on both jambs of elevator hoistway entrances and shall be 60 inches (1525 mm) above the floor or ground, measured from the baseline of the characters. A tactile star shall also be provided on both jambs at the main entry level. Such characters shall be 2 inches (51 mm) high and shall comply with Section 703.2.

407.4.5 Doors. Elevator hoistway doors shall be either swinging or horizontally sliding type. Elevator doors shall open and close automati-

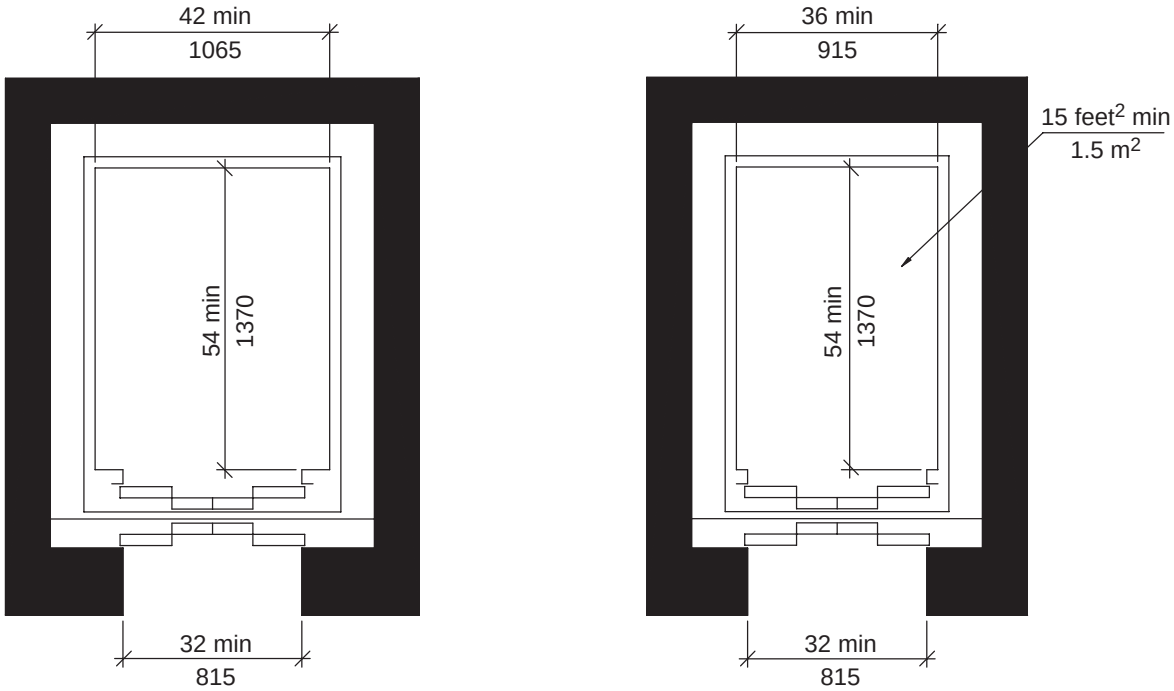

(a) New Construction **(b) Existing Buildings**

Fig. 407.4.6
Inside Dimensions of Limited Use/Limited Application (LULA) Elevator Cars

cally. Horizontally sliding type hoistway and car doors shall comply with Section 407.2.5. Swinging hoistway and car doors shall comply with Section 404. Swinging doors shall be low energy power-operated and shall comply with ANSI/BHMA A156.19. Power operated swinging doors shall remain open for 20 seconds minimum when activated.

407.4.6 Inside Dimensions of Elevator Cars. Elevator cars shall provide a clear width of 42 inches (1065 mm) minimum and a clear depth of 54 inches (1370 mm) minimum. Car doors shall be positioned at the narrow end(s) of the car and shall provide a clear width of 32 inches (815 mm) minimum.

> **EXCEPTION:** For installations in existing buildings, elevator cars shall provide a clear width of 36 inches (915 mm) minimum, a clear depth of 54 inches (1370 mm) minimum, and a net clear platform area of 15 square feet (1.5 m^2) minimum.

407.4.7 Floor or Ground Surfaces. Floor or ground surfaces in elevator cars shall comply with Section 302. The horizontal distance between the car platform sill and the edge of any hoistway landing shall be $1^1/_4$ inches (32 mm) maximum.

407.4.8 Illumination Levels. The level of illumination at the car controls, platform, and car threshold and landing sill shall be 5 footcandles (54 lux) minimum.

407.4.9 Car Controls. Elevator car controls shall comply with Sections 407.4.9.1 through 407.4.9.4.

> **407.4.9.1 Buttons.** Control buttons shall be $^3/_4$ inch (19 mm) minimum in their smallest dimension. Control buttons shall be raised or flush. Control buttons shall be arranged with numbers in ascending order.
>
> **407.4.9.2 Identification.** Control buttons shall be identified by tactile characters complying with Section 703.2. Tactile characters shall be placed immediately to the left of the button to which they apply. The control button for the main entry floor shall be identified with a tactile symbol complying with Table 407.2.11.2. Buttons with floor designations shall be provided with visible indicators to show that a call has been registered. The visible indication shall extinguish when the car arrives at the designated floor.
>
> **407.4.9.3 Height.** Buttons with floor designations shall be 48 inches (1220 mm) maxi-

mum above the floor. Emergency controls, including the emergency alarm, shall be grouped at the bottom of the panel. Emergency control buttons shall have their centerlines 35 inches (890 mm) minimum above the floor.

407.4.9.4 Location. Controls shall be on a side wall and a clear floor or ground space complying with Section 309.2 shall be provided.

407.4.10 Emergency Communications. Emergency two-way communication systems between the elevator car and a point outside the hoistway shall comply with ASME/ANSI A17.1. The highest operable part of a two-way communication system shall comply with Section 308.3. If the device is in a closed compartment, the compartment door hardware shall comply with Section 309. Tactile symbols and characters complying with Section 703.2 shall be provided adjacent to the device. If the system uses a handset, the cord from the panel to the handset shall be 29 inches (735 mm) long minimum. The car emergency signaling device shall not be limited to voice communication. If instructions for use are provided, essential information shall be presented in both tactile and visual form complying with Section 703.

407.5 Existing Elevators. Accessible elements of existing elevators shall comply with Sections 407.5, 407.2.4, 407.2.6, 407.2.7, 407.2.9, 407.2.10, and 407.2.13. They shall be passenger elevators as classified by ASME/ANSI A17.1.

EXCEPTION: Destination-oriented elevators which comply with Section 407.3.

407.5.1 Automatic Operation. Elevator operation shall be automatic. Each car shall be equipped with a self-leveling feature that will automatically bring and maintain the car at floor landings within a tolerance of $^1/_2$ inch (13 mm) under rated loading to zero loading conditions.

407.5.2 Call Buttons. Call buttons in elevator lobbies shall be 35 inches (890 mm) minimum and 48 inches (1220 mm) maximum above the floor or ground, measured to the centerline of the button, where the appropriate floor or ground area complying with Section 305 is provided. The button that designates the up direction shall be above the button that designates the down direction. Keypad controls complying with Section 407.2.2 shall be permitted.

407.5.3 Hall Signals. A visible and audible signal shall be provided at each hoistway entrance to indicate which car is answering a call, except that in-car signals complying with Section 407.2.3 shall be permitted. Audible signals shall sound once for the up direction and twice for the down direction, or shall have verbal annunciators that state the word “up” or “down.” If new hall signals are provided, they shall comply with Section 407.2.3.

407.5.4 Doors. Doors shall comply with Section 407.5.4.1 or 407.5.4.2.

407.5.4.1 Power Operated Doors. Power operated horizontally sliding car and hoistway doors opened and closed by automatic means shall comply with Section 407.2.5.

407.5.4.2 Manually Operated Doors. Existing manually operated hoistway swinging doors shall comply with Sections 404.2.3 and 404.2.9. A power operated car door that opens and maintains a 32 inch (815 mm) minimum clear width shall be provided. Closing of the car door shall not be initiated until the hoistway door is closed. Car gates are prohibited.

407.5.5 Inside Dimension of Elevator Cars. The inside dimension of elevator cars shall comply with Section 407.2.8.

EXCEPTION: Existing car configurations that provide a clear floor area of 16 square feet (1.5 m^2) minimum, and provide 48 inches (1220 mm) minimum inside clear depth and a 36 inch (915 mm) minimum clear width.

407.5.6 Car Controls. Elevator controls shall comply with Sections 407.5.6.1 through 407.5.6.4.

407.5.6.1 Buttons. Car control buttons shall be $^3/_4$ inch (19 mm) minimum in their smallest dimension. Control buttons shall be raised, flush or recessed. Where the car operating panel is changed, control buttons shall comply with Section 407.2.11.1.

407.5.6.2 Designations and Indicators for Control Buttons. All control buttons shall comply with Section 407.2.11.2.

EXCEPTION: Where existing car operating panel construction precludes locating tactile markings to the left of the controls, markings shall be placed as near to the control as possible.

407.5.6.3 Height. All buttons with floor designations shall be 54 inches (1370 mm) maximum above the floor for parallel approach and 48 inches (1220 mm) maximum above the floor for forward approach.

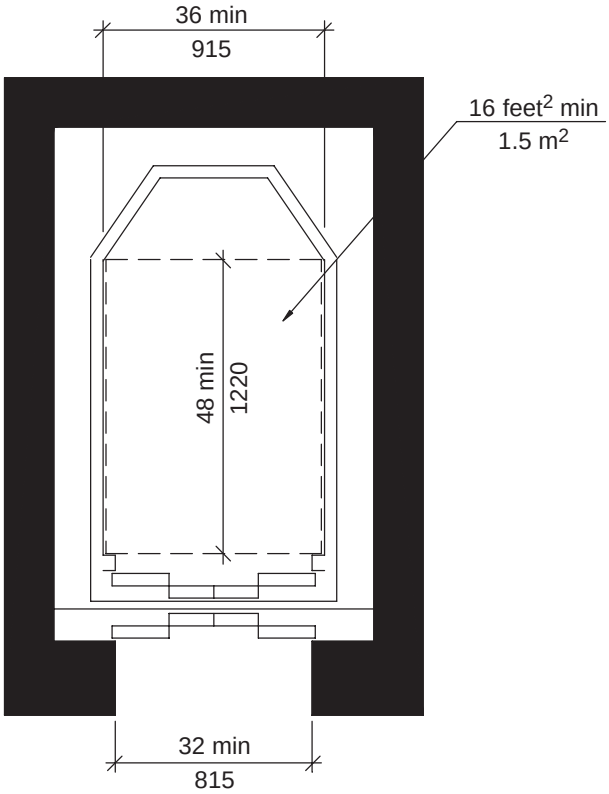

Fig. 407.5.5
Existing Car Configurations

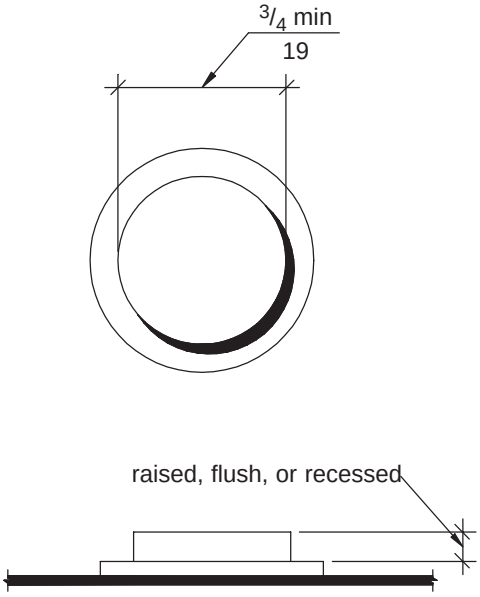

Fig. 407.5.6.1
Elevator Car Control Buttons in Existing Elevators

Where the panel is changed, it shall comply with Section 407.2.11.3.

407.5.6.4 Operating Panels. Where a new car operating panel complying with the requirements of Section 407.2.11 is provided, existing car operating panels not complying with Section 407.2.11 are not required to be removed.

407.5.7 Car Position Indicators. Where a new car position indicator is provided, the indicator shall comply with Section 407.2.12.

407.5.8 Identification. Elevators that comply with Section 407.5 shall be clearly identified with the International Symbol of Accessibility complying with Section 703.7, unless all elevators in the building are accessible.

408 Wheelchair (Platform) Lifts

408.1 General. Wheelchair (platform) lifts shall comply with ASME/ANSI A17.1 and with Sections 302, 305, and 309. Wheelchair (platform) lifts shall not be attendant-operated and shall provide unassisted entry and exit from the lift.

408.2 Doors and Gates. Lifts shall have low energy power-operated doors or gates complying with Section 404.3. Doors and gates shall remain open for 20 seconds minimum. End doors shall be 32 inches (815 mm) minimum clear width. Side doors shall be 42 inches (1065 mm) minimum clear width.

EXCEPTION: Lifts having doors or gates on opposite sides shall be permitted to have manual doors or gates.